NAME:	PAL1050WKL
SIZE:	1050
WK/WH:	WITH KICK
CONFIGURATION:	LEFT BOWL

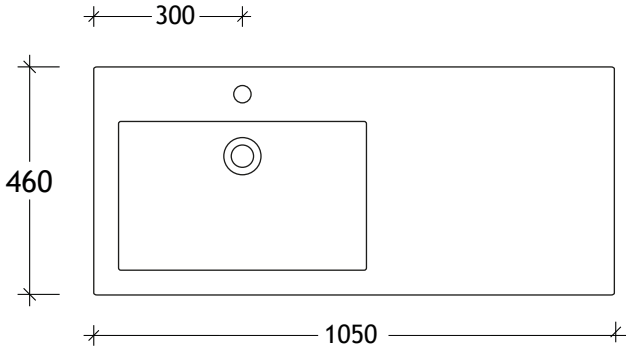

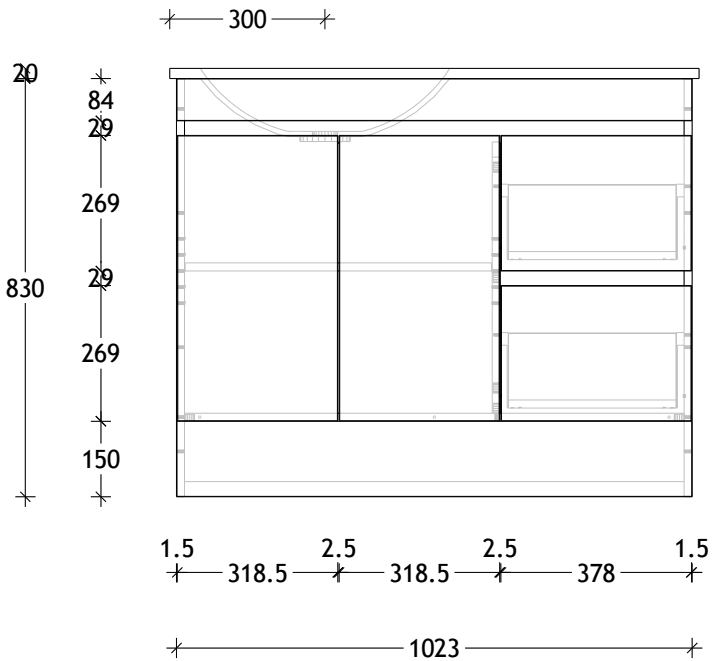

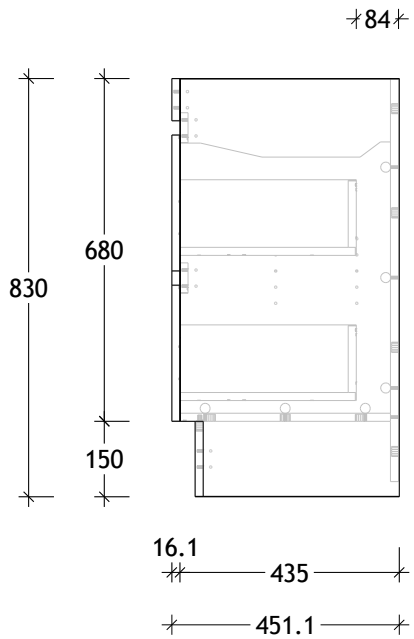

PLEASE NOTE: Do not perform any plumbing rough in prior to taking delivery of your vanity, as all measurements are nominal and are subject to change. Measure exact locations from your vanity once it is on site.