SECTION A-A

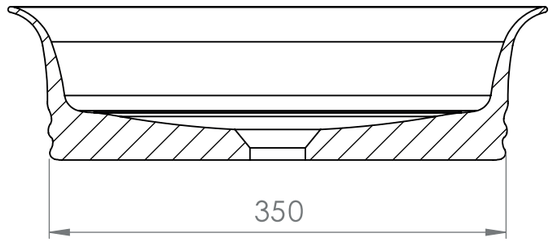

SCALE 1:5

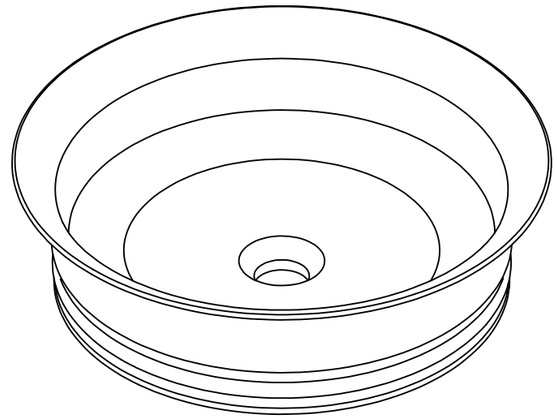

TOP VIEW

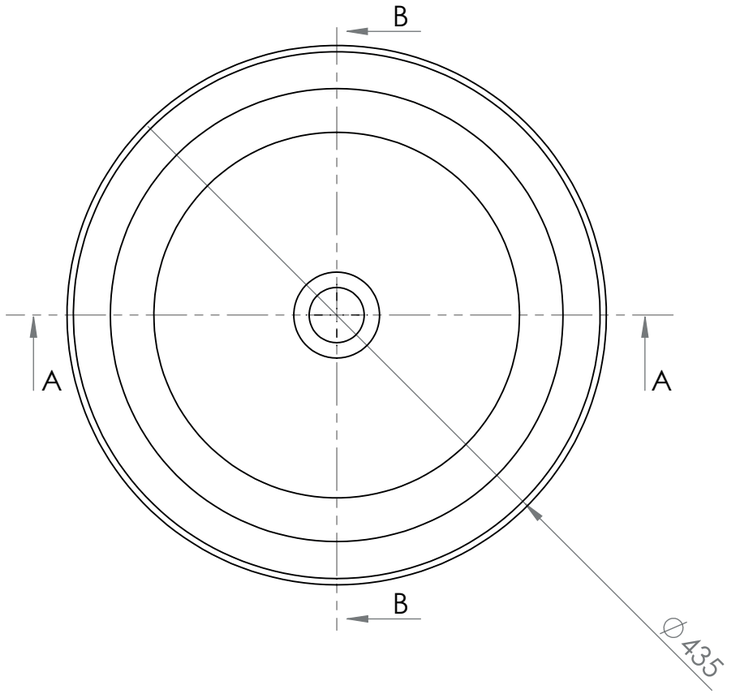

SECTION B-B

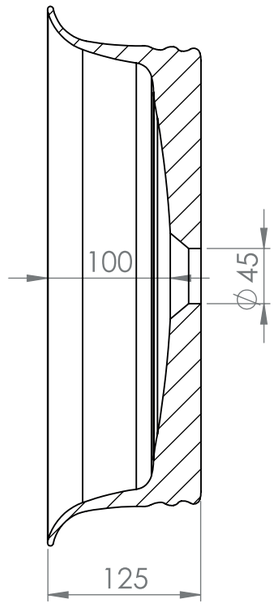

BOTTOM VIEW

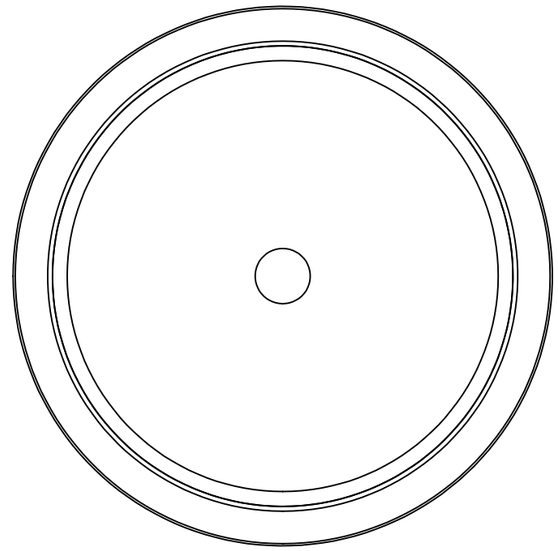

NOTES:
ALL DIMENSIONS IN MILLIMETRES
NOT TO SCALE

Ceramic above-counter: Neptune
White glazed
Overall dimensions: 435 diameter
TOPCNEPWH

DISCLAIMER: Architectural Designer Products does not recommend cutting basin hole in benchtop material until basin is on site. Actual basin dimensions may vary.