SPECIFICATIONS
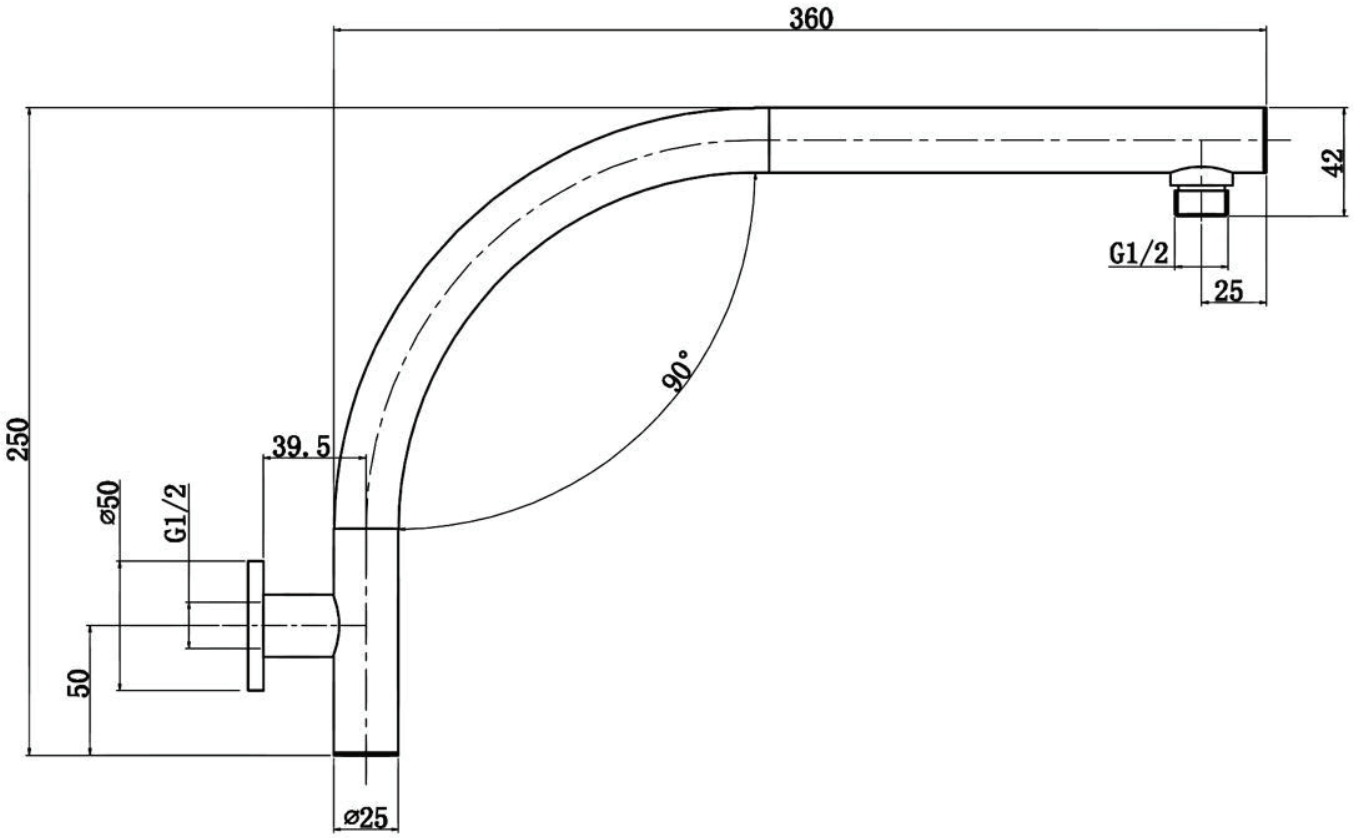
TWILIGHT HIGH RISE SHOWER ARM