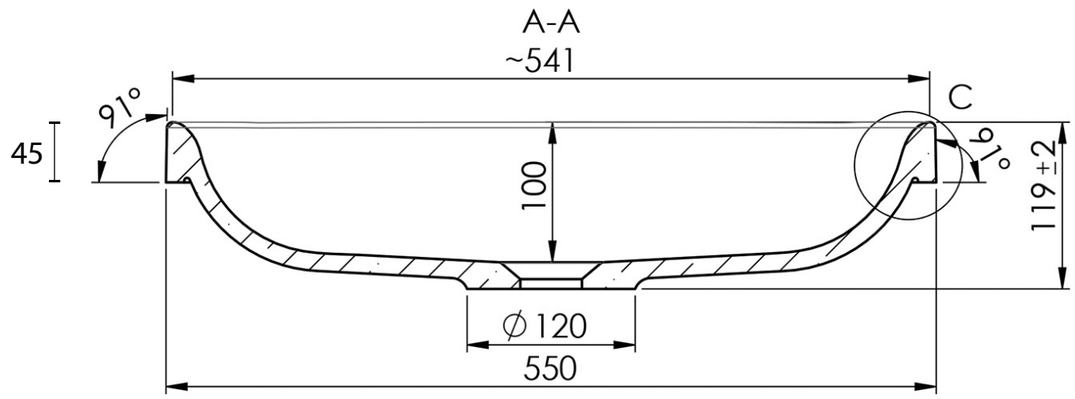

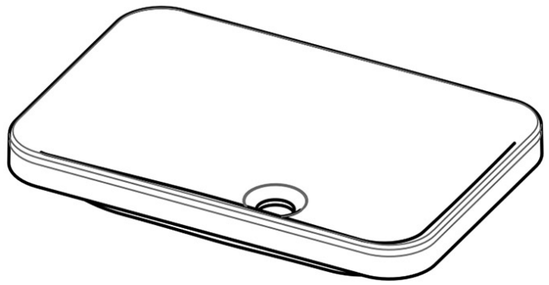

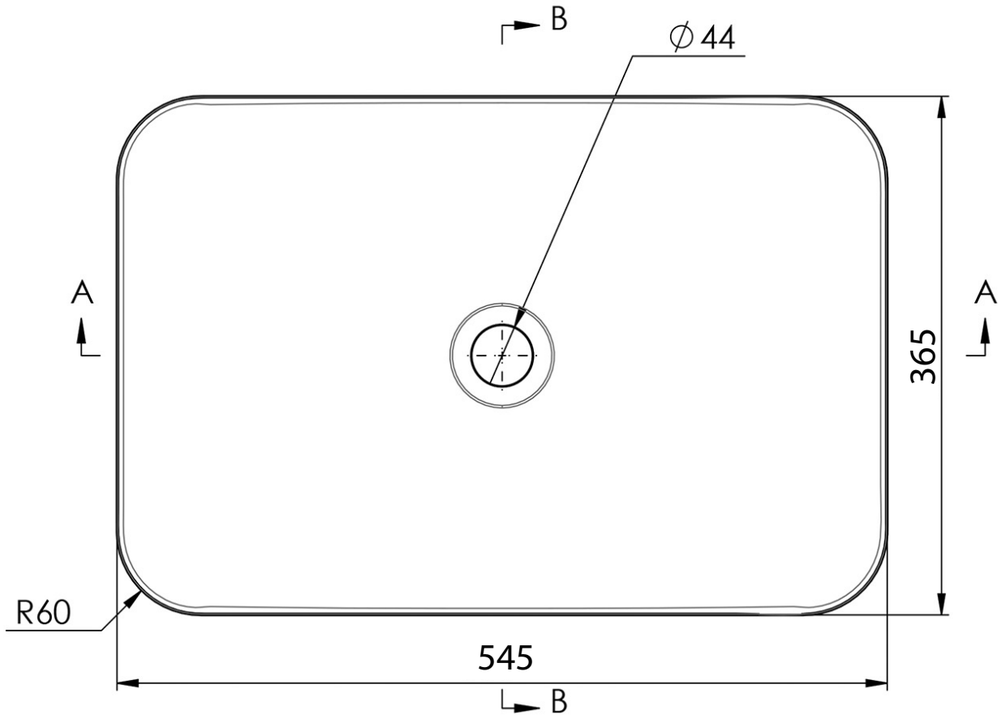

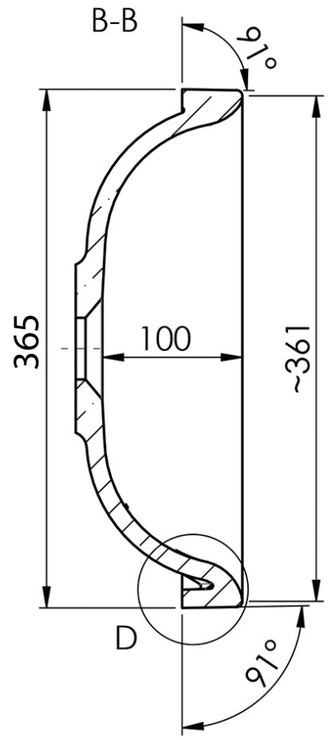

NOTES:
ALL DIMENSIONS IN MILLIMETRES
NOT TO SCALE

DISCLAIMER: Architectural Designer Products does not recommend cutting basin hole in benchtop material until basin is on site. Actual basin dimensions may vary.

Solid Surface Semi-Inset: Pride
Overall dimensions: 545x365
Cutout size: 526x346